This document is subject to change without notice
This document is the exclusive property of DETI SAS and cannot be communicated to thrid parties or reproduced without prior written permission

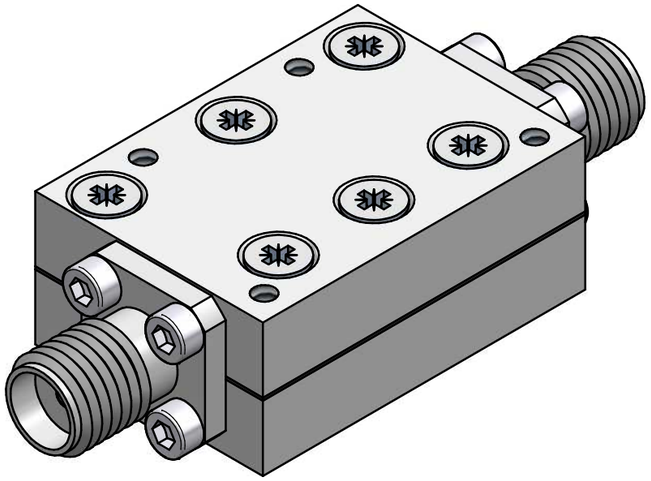

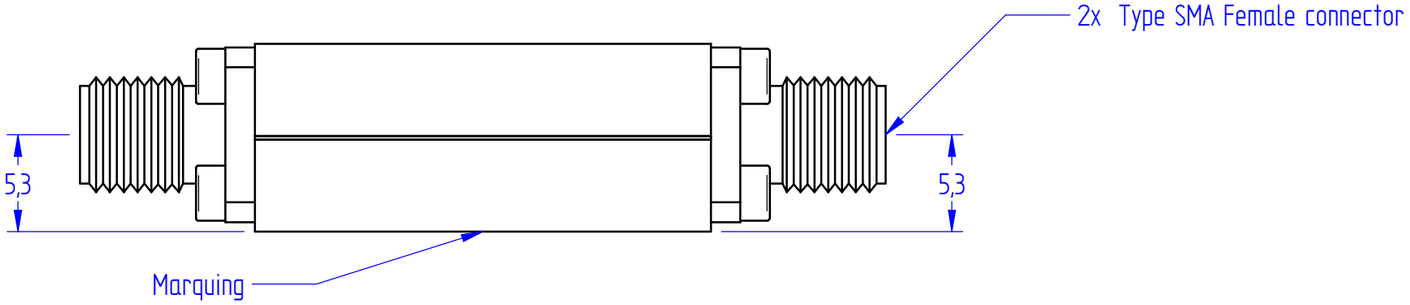

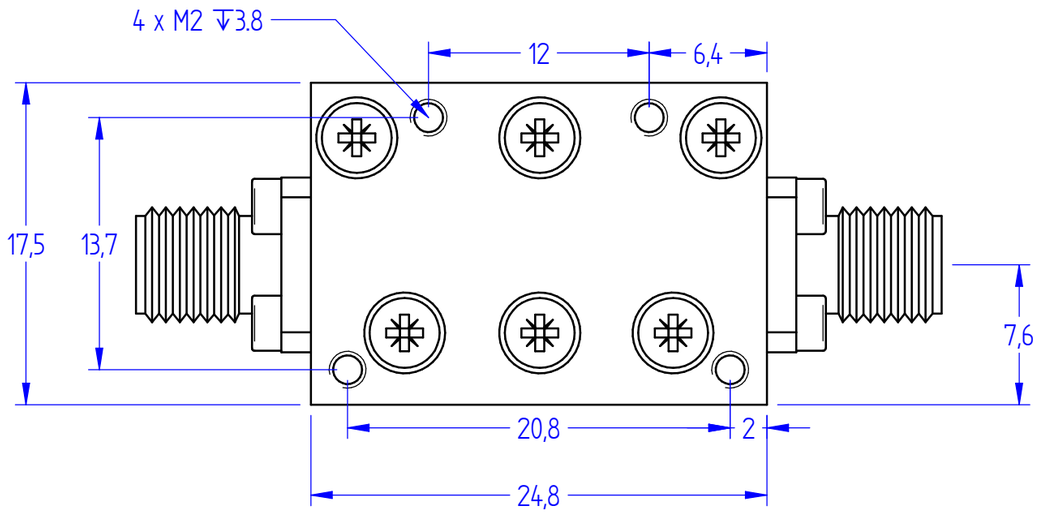

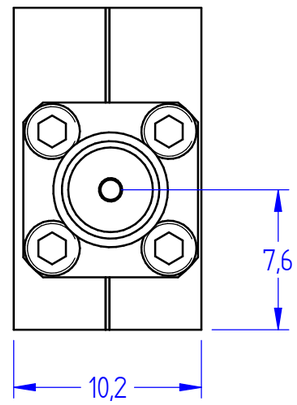

TECHNICAL SPECIFICATIONS

Frequency Range :	**2000 - 18000 MHz**
Insertion Loss :	**1.0 dB max.**
VSWR :	**2.0:1 max.**
Rejections :	**> 3 dB @ 1800 MHz** **> 20 dB @ 1200 MHz** **> 3 dB @ 19500 MHz** **> 20 dB @ 21000 MHz**
Max. input Power :	**2 W CW**
Operating Temperature :	**-40°C to +70°C**
Storage Temperature :	**-55°C to +85°C**
Input Connector :	**SMA Female**
Output Connector :	**SMA Female**

Last rev. additional information :

Rev.	Change	Drawn	Date	Check	Date	Approb.	Date
-	Preliminary	S. Mellaza	09/09/19	W.Kherraz	16/10/19	S. Mellaza	16/10/19

Material :	Aluminum
Treatment :	Silver plated
Finish :	-
Gen. Tol. :	ISO2768 - mK
Orientation :	
Size :	A3
Classif. :	2
Scale :	3:1
Sheet :	1 / 1

Titre : Filtre Passe-Bande 2.0 - 18 GHz

Title : Band Pass Filter 2.0 - 18 GHz

Comment : BPF-SS-1200-20-2000-18000-21000-20-SF-SF

Document Number : 800179 1501A

Drawn : smellaza

Date : 2019/09/09

DéTi MICROWAVE
www.deti-sa.com